CROWD CONTROL & MIRRORS

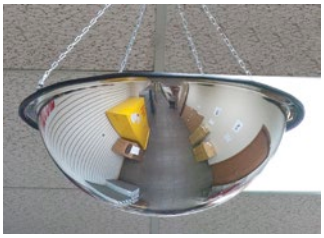

Free-Standing & Wall Mount Crowd Control Barriers. . . 1694 - 1697
Outdoor Barriers, Posts & Carts . . . . . 1697 - 1698
Classic Design Posts & Rope 1699
Traffic Safety Posts & Kits 1700
Stanchions & Chain Kits. 1701
Safety Mirrors. . . . . 1702 - 1703
Inspection Mirrors 1704

ZENITH® Safety Products

TENSATOR®

BANNER STAKES
BANNERSTAKES.COM

Mr. Chain

MAG-MATE™

GENERAL®

FREE-STANDING CROWD CONTROL BARRIERS

ZENITH® Safety Products

- 4-way connection permits all posts to receive up to three tapes from any direction
- Slow retracting tape cassette insures tape will retract safely
- Specially designed locking mechanism prevents accidental release (verify if the end clip is unlocked before releasing)
- Receiver posts without tape cassettes are available for use at the end of a line of posts
- Height: 35"
- Recommended post spacing: 7' Tape = 6'6"
  12' Tape = 11'6"

WITHOUT WHEELS

Model No.	Tape Colour	Message/ Tape Design	Tape Length'	Price /Each
STAINLESS STEEL BARRIERS				
SAS226	Red	-	7	184.00
SEA794	Black	-	7	184.00
SDN298	Yellow	-	7	184.00
SDN299	Yellow	Caution Do Not Enter	7	205.00
SDN300	Yellow	*Attention Ne Pas Entrer*	7	205.00
SDN301	Blue	-	7	184.00
SDN302	Green	-	7	184.00
SDN303	Black/White	Black with White Stripe	7	205.00
SDN304	Yellow/Black	Yellow & Black Stripes	7	205.00
SDL100	Red	-	12	205.00
SDN771	Black	-	12	205.00
SDN772	Yellow	-	12	205.00
STEEL - BLACK BARRIERS				
SDN305	Red	-	7	163.00
SAS227	Black	-	7	163.00
SDN306	Yellow	-	7	163.00
SDN307	Yellow	Caution Do Not Enter	7	188.00
SDN308	Yellow	*Attention Ne Pas Entrer*	7	188.00
SDN309	Blue	-	7	163.00
SDN310	Green	-	7	163.00
SDN311	Black/White	Black with White Stripe	7	188.00
SDL987	Yellow/Black	Yellow & Black Stripes	7	188.00
SDN773	Red	-	12	188.00
SDL101	Black	-	12	188.00
SDN774	Yellow	-	12	188.00
STEEL - YELLOW BARRIERS				
SDN312	Red	-	7	145.00
SDN313	Black	-	7	145.00
SAS228	Yellow	-	7	145.00
SAS229	Yellow	Caution Do Not Enter	7	165.00
SEE818	Yellow	*Attention Ne Pas Entrer*	7	165.00
SDN314	Blue	-	7	145.00
SDN315	Green	-	7	145.00
SDN316	Black/White	Black with White Stripe	7	165.00
SDN317	Yellow/Black	Yellow & Black Stripes	7	165.00
SDN775	Red	-	12	165.00
SDN776	Black	-	12	165.00
SDL102	Yellow	-	12	165.00

WITH WHEELS

Model No.	Tape Colour	Message/ Tape Design	Tape Length'	Price /Each
STAINLESS STEEL BARRIERS				
SEI760	Red	-	7	210.00
SDN318	Black	-	7	210.00
SDN319	Yellow	-	7	210.00
SDN320	Yellow	Caution Do Not Enter	7	239.00
SDN321	Yellow	*Attention Ne Pas Entrer*	7	239.00
SDN322	Blue	-	7	210.00
SDN323	Green	-	7	210.00
SDN324	Black/White	Black with White Stripe	7	239.00
SDN325	Yellow/Black	Yellow & Black Stripes	7	239.00
SDL103	Red	-	12	239.00
SDN777	Black	-	12	239.00
SDN778	Yellow	-	12	239.00
STEEL - BLACK BARRIERS				
SDN326	Red	-	7	185.00
SDN327	Black	-	7	185.00
SDN341	Yellow	-	7	185.00
SDN328	Yellow	Caution Do Not Enter	7	210.00
SDN329	Yellow	*Attention Ne Pas Entrer*	7	210.00
SDN330	Blue	-	7	185.00
SDN331	Green	-	7	185.00
SDN332	Black/White	Black with White Stripe	7	197.00
SDN333	Yellow/Black	Yellow & Black Stripes	7	210.00
SDN779	Red	-	12	210.00
SDL104	Black	-	12	210.00
SDN780	Yellow	-	12	210.00
STEEL - YELLOW BARRIERS				
SDN342	Red	-	7	165.00
SDN334	Black	-	7	165.00
SEI764	Yellow	-	7	165.00
SDN335	Yellow	Caution Do Not Enter	7	190.00
SDN336	Yellow	*Attention Ne Pas Entrer*	7	190.00
SDN337	Blue	-	7	165.00
SDN338	Green	-	7	165.00
SDN339	Black/White	Black with White Stripe	7	190.00
SDN340	Yellow/Black	Yellow & Black Stripes	7	190.00
SDN781	Red	-	12	190.00
SDN782	Black	-	12	190.00
SDL105	Yellow	-	12	190.00

RECEIVER POSTS WITHOUT WHEELS

Model No.	Description	Price /Each
SAS230	Stainless Steel	151.00
SAS231	Black - Steel	138.00
SAS232	Yellow - Steel	123.00

RECEIVER POSTS WITH WHEELS

Model No.	Description	Price /Each
SEI761	Stainless Steel	174.00
SEI763	Black - Steel	154.00
SEI765	Yellow - Steel	142.00

WALL MOUNT BARRIERS

- Ideal where floor space is essential
- Slow retracting tape cassette ensures tape will retract safely
- Specially designed locking mechanism prevents accidental release
- Includes one wall receiver and hardware
- Dimensions: 3-5/8" L x 3" W x 5-5/8" H

ZENITH® Safety Products

Model No.	Tape Colour	Message/Tape Design	Tape Length'	Price /Each
STAINLESS STEEL WALL MOUNT BARRIERS				
SDN560	Red	-	7	**94.45**
SED813	Black	-	7	**94.45**
SDN561	Yellow	-	7	**94.45**
SDN562	Yellow	Caution Do Not Enter	7	**109.00**
SDN563	Yellow	*Attention Ne Pas Entrer*	7	**109.00**
SDN564	Blue	-	7	**94.45**
SDN565	Green	-	7	**94.45**
SDN566	Black/White	Black with White Stripe	7	**109.00**
SDN567	Yellow/Black	Yellow & Black Stripes	7	**109.00**
SDN571	Red	-	12	**109.00**
SDN764	Black	-	12	**109.00**
SDN765	Yellow	-	12	**109.00**
STEEL - BLACK WALL MOUNT BARRIERS				
SDN554	Red	-	7	**94.45**
SAS233	Black	-	7	**94.45**
SEC074	Yellow	-	7	**94.45**
SEB178	Yellow	Caution Do Not Enter	7	**109.00**
SDN555	Yellow	*Attention Ne Pas Entrer*	7	**109.00**
SDN556	Blue	-	7	**94.45**
SDN557	Green	-	7	**94.45**
SDN558	Black/White	Black with White Stripe	7	**109.00**
SDN559	Yellow/Black	Yellow & Black Stripes	7	**109.00**
SDN568	Red	-	12	**109.00**
SDN569	Black	-	12	**109.00**
SDN570	Yellow	-	12	**109.00**

WALL MOUNT BARRIERS WITH MAGNETIC TAPE

- Ideal solution for restricting access in corridors, washrooms, and warehouses aisles
- The magnetic end allows user to connect the tape to any metal surface
- Wall mount barrier includes one wall receiver and hardware
- Slow retracting tape cassette ensures tape will retract safely
- Material: Steel
- Mounting type: Screw Mount
- End of tape for 12' models includes 3 magnets
- End of tape for 7' models includes 2 magnets

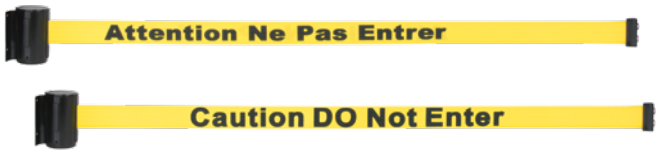

ZENITH® Safety Products

Model No.	Tape Colour	Message/Tape Design	Tape Length'	Price /Each
BLACK FINISH				
SGQ993	Yellow/Black	Yellow & Black Stripes	7	**114.00**
SGQ994	Black	-	7	**114.00**
SGQ997	Yellow	Caution Do Not Enter	7	**114.00**
SGQ996	Yellow	*Attention Ne Pas Entrer*	7	**114.00**
SGQ999	Yellow	-	7	**114.00**
SGR001	Red	-	7	**114.00**
SGR002	Blue	-	7	**114.00**
SGQ992	Red	-	12	**114.00**
SGQ995	Yellow	-	12	**114.00**
SGQ998	Black	-	12	**114.00**
STAINLESS FINISH				
SGR017	Yellow/Black	Yellow & Black Stripes	7	**114.00**
SGR018	Black	-	7	**114.00**
SGR021	Yellow	Caution Do Not Enter	7	**114.00**
SGR020	Yellow	*Attention Ne Pas Entrer*	7	**114.00**
SGR023	Yellow	-	7	**114.00**
SGR024	Red	-	7	**114.00**
SGR025	Blue	-	7	**114.00**
SGR016	Red	-	12	**114.00**
SGR019	Yellow	-	12	**114.00**
SGR022	Black	-	12	**114.00**

SIGNS FOR CROWD CONTROL POST

- Sign holder to fit on top of existing Zenith® crowd control posts
- Ideal for hotels, airports, restaurants, movie theatres, stores, schools, offices, banks and more
- Great to help direct foot traffic, and easily and visually communicate with customers important information
- Material: Iron with black powder coating
- Dispenser holder dimensions: 17-7/8" H x 5-11/16" W
- Finish: Black

ZENITH® Safety Products

Model No.	Dimensions H"	x	W"	Price /Each
SIGN FRAMES ONLY				
SGU786	7	x	10	**39.25**
SGU787	10	x	7	**39.25**
SGU788	10	x	14	**45.25**
SGU789	14	x	10	**45.25**
DISPENSER HOLDER ONLY				
SGU790		-		**56.95**
SIGN FRAME & DISPENSER HOLDER KIT				
SGU791	7	x	10	**64.50**
SGU793	10	x	14	**68.95**

CROWD CONTROL

SLIMLINE TENSABARRIER®

TENSATOR®

- The most popular Tensabarrier post model traditionally seen in hotels, banks, airports, theaters, and other high-traffic areas
- Easy to move into position
- Belts retract slowly and safely
- Made of woven polyester, the belts are strong enough to last the lifetime of the post
- Works with retractable belts of either 7.5' or 13'
- Height: 38"
- Post diameter: 2"
- Base diameter: 14", does not take up a lot of floor space
- Weight: 24 lbs.

Model No.	Mfg. No.	Tube	Tape Colour	Tape Length	Price /Each
BARRIERS					
SF951	890B-33-33-33-STD-NO-B9	Black	Black	7.5'	**339.00**
SF952	890B-33-33-33-STD-NO-S3	Black	Black/White	7.5'	**349.00**
SF953	890B-33-33-33-STD-NO-S4	Black	Black/Yellow	7.5'	**349.00**
SF954	890B-33-33-33-STD-NO-Y5	Black	Yellow	7.5'	**349.00**
SF950	890U-1P-1P-1P-STD-NO-L5	Polished Chrome	Blue	7.5'	**369.00**
SF949	890U-1P-1P-1P-STD-NO-R5	Polished Chrome	Red	7.5'	**359.00**
RECEIVER POSTS					
SF957	890B-33-33-RCV	Black	-	-	**309.00**
SF956	890U-1P-1P-RCV	Polished Chrome	-	-	**329.00**

ADVANCE TENSABARRIER®

- Use for indoor and outdoor applications
- Design ensures easy setup and quick storage
- Smooth 2.5" post contains the SlowRetract® belt cassette for a seamless look and maximum safety
- Locking belt receivers prevent accidental release of the belt
- 4-way connecting system allows up to three receivers to attach to a post
- Receiver post without cassette also available
- Additional tape colour options and custom printing available upon request
- Posts are also available in stainless steel or chrome finishes
- Dimensions: 36" H, tube dia. 2.5", base dia. 14"
- Belt dimensions: 7.5' L x 2" W (13' available upon request)
- Material: Steel

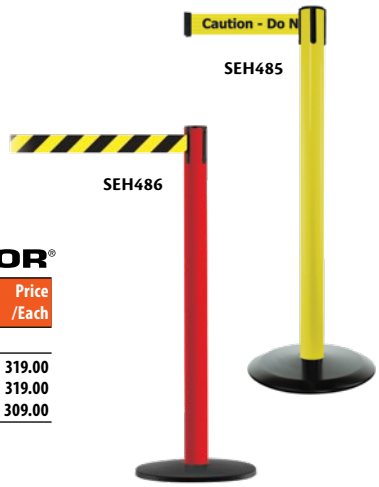

TENSATOR®

Model No.	Mfg. No.	Tube Colour	Tape Colour	Message	Price /Each
POST/TAPE COMBINATION					
SEH483	889B-33-21-STD-NO-RGX-C	Red	Red/White	Caution Do Not Enter	**349.00**
SEH484	889B-33-33-STD-NO-YAX-C	Black	Black/Yellow	Caution Do Not Enter	**349.00**
SEH485	889B-33-35-STD-NO-YAX-C	Yellow	Black/Yellow	Caution Do Not Enter	**349.00**
SEH486	889B-33-21-STD-NO-D4X-C	Red	Black/Yellow Diagonal Stripe	-	**349.00**
SEH487	889B-33-33-STD-NO-D4X-C	Black	Black/Yellow Diagonal Stripe	-	**349.00**
SEH488	889B-33-35-STD-NO-D4X-C	Yellow	Black/Yellow Diagonal Stripe	-	**349.00**
SEH489	889B-33-35-STD-NO-Y5X-C	Yellow	Yellow	-	**349.00**

Model No.	Mfg. No.	Tube Colour	Price /Each
RECEIVER POSTS			
SEH490	889B-21-21/RCVR	Red	**319.00**
SEH491	889B-33-33/RCVR	Black	**319.00**
SEH492	889B-35-35/RCVR	Yellow	**309.00**

ROLLABARRIER®

- Wheelable, stackable convenience and contemporary good looks
- Patented SlowRetract™ braking mechanism insures that belt will retract slowly and safely if accidentally released
- Locking belt receivers prevent the belt from being accidentally released
- Nylon grommet to prevent belt from fraying, belt will look fresh year after year
- Unique nesting mechanism for moving 3 to 4 posts at once
- Each post is 39" high with a tube diameter of 2.5" and a base diameter of 13.5"
- Tape length: 7' 6"
- Grey hammertone finish
- Posts are also available in stainless steel, chrome or powder coat finishes
- Lifetime limited warranty

TENSATOR®

Model No.	Mfg. No.	Description	Tape Colour	Price /Each
SAQ142	RB1-73-73-STD-NO-R5X-C-S	Grey Hammertone	Red	**389.00**
SAQ145	RB1-73-73-STD-NO-L5X-C-S	Grey Hammertone	Blue	**389.00**
SAQ146	RB1-73-73-STD-NO-B9X-C-S	Grey Hammertone	Black	**379.00**
SAQ147	RB1-73-73-STD-NO-S3X-C-S	Grey Hammertone	Black w/White Stripe	**389.00**
SAQ148	RB1-73-73-STD-NO-S4X-C-S	Grey Hammertone	Black w/Yellow Stripe	**389.00**
SAQ149	RB1-73-73-STD-NO-Y5X-CS	Grey Hammertone	Yellow	**389.00**
SAQ150	RB1-73-73-STD-NO-B5X-C-S	Grey Hammertone	Grey	**389.00**

REPLACEMENT TAPE CASSETTES FOR TENSABARRIER® & ROLLABARRIER®

- Tape length: 7' 6"

Model No.	Mfg. No.	Tape Colour	Price /Each	Model No.	Mfg. No.	Tape Colour	Price /Each
SF960	CASSETTE-STD-NO-R5X-C	Red	**139.00**	**SF964**	CASSETTE-STD-NO-S3X-C	Black w/white stripe	**149.00**
SF961	CASSETTE-STD-NO-L5X-C	Blue	**149.00**	**SF965**	CASSETTE-STD-NO-S4X-C	Black w/yellow stripe	**149.00**
SF962	CASSETTE-STD-NO-B9X-C	Black	**149.00**	-	-	-	
SF963	CASSETTE-STD-NO-Y5X-C	Yellow	**149.00**	-	-	-	

TENSABARRIER® WALL MOUNTED UNITS

- Handsomely styled wall-mounted TensaBarrier®
- Designed for indoor use where only a limited area of traffic control is necessary
- Available in chrome or impact resistant ABS plastic casing with tape
- Wall receptacle is in black only
- Magnetic case recommended for warehouses
- Wall receptacle included with all TensaBarrier® wall mounted units

TENSATOR®

SF959 Wall Receptacle

SF970 Case

SEI733

Model No.	Mfg. No.	Description	Tape Colour	Tape Length	Price /Each
SF968	897-15-S-1P-N0-L5X-C	Black and Chrome Case	Blue	15'	**219.00**
SF969	897-15-S-21-N0-R5X-C	Black and Red Case	Red	15'	**199.00**
SF970	897-15-S-33-N0-S3X-C	Black Case	Black w/White Stripe	15'	**199.00**
SEI733	897-15-M-33-N0-D4X-D	Black Case w/Magnetic Backing	Black w/Yellow Dia Stripe	15'	**279.00**
SEI734	896-STD-33-N0-D4-C	Black Case	Black w/Yellow Dia Stripe	7.5'	**169.00**
SEI735	896-MAX-33-N0-D4-C	Black Case	Black w/Yellow Dia Stripe	13'	**199.00**
SF959	898CLIP	Wall Receptacle	-	-	**23.80**

OUTDOOR TENSABARRIER®

- Tube constucted of UPVC in white, red or yellow mounted on PVC grey base
- Lightweight when empty for easy transportation
- Fill base with water or sand for stability
- Weather resistant
- Post: 37" H; tube O.D.: 2.5"; base: 15" diameter
- 4-way retractable tape cassette
- Additional tape colour options and custom printing available upon request

TENSATOR®

Model No.	Mfg. No.	Tube Colour	Tape Colour	Tape Length	Price /Each
POST/TAPE COMBINATION					
SAM967	885-35-STD-N0-D4X-C	Yellow	Yellow/Black Diagonal	7' 6"	**289.00**
SAM968	885-32-STD-N0-D4X-C	White	Yellow/Black Diagonal	7' 6"	**289.00**
SAM969	885-21-STD-N0-D4X-C	Red	Yellow/Black Diagonal	7' 6"	**289.00**
SF979	885-35-STD-N0-YAX-C	Yellow	Yellow w/Black Message - Caution Do Not Enter	7' 6"	**289.00**
POST/TAPE COMBINATION STRIPED					
SF980	885-32-MAX-N0-D3X-C	White	Red/White Diagonal	13'	**329.00**
SF981	885-21-MAX-N0-D3X-C	Red	Red/White Diagonal	13'	**329.00**
SF982	885-35-MAX-N0-D4X-C	Yellow	Yellow/Black Diagonal	13'	**329.00**
RECEIVER POSTS					
SF983	885-32-32-RCV	White	-	-	**249.00**
SF984	885-21-21-RCV	Red	-	-	**249.00**
SF985	885-35-35-RCV	Yellow	-	-	**249.00**

REPLACEMENT CASSETTES FOR ADVANCE, OUTDOOR & STOWAWAY® TENSABARRIER®

- Cassettes are 4-way and quick retracting
- Includes tape, spring mechanism, receiver and tape end piece
- Additional tape colour options and custom printing available upon request

Model No.	Mfg. No.	Description	Tape Colour	Tape Length	Price /Each
SAM970	CASSETTE-STD-N0-D4X-C	Striped	Yellow/Black Diagonal	7'6"	**139.00**
SF987	ADV144-YA	Caution Do Not Enter	Yellow w/Black Message	7'6"	**139.00**
SF988	CASSETTE-MAX-N0-D3X-C	Striped	Red/White Diagonal	13'	**229.00**
SF989	CASSETTE-MAX-N0-D4X-C	Striped	Yellow/Black Diagonal	13'	**229.00**

PORTABLE INTERLOCKING BARRIERS

- Ideal for directing people in areas where crowd control is required
- Rugged welded steel construction
- Feet are removable so railing will lay flat for shipping and storage
- Includes connectors to attach multiple units together
- Overall size is 102" L x 40" H
- Distance between vertical bars: 7"
- Rail diameter: 1 5/8"
- Weight: 56 lbs.

ZENITH® Safety Products

Model No.	Description	Price /Each
SEE395	Galvanized Finish	**190.00**
SEE396	Safety Yellow Finish	**195.00**

EXPANDABLE BARRIERS

- Steel and aluminum construction
- Collapsible design allows for easy storage when not in use
- Lightweight and free standing for easy setup when needed
- Side hook allows multiple units to be used together
- Expanded width: 11'
- Height: 37"
- Weight: 20 lbs.
- Colour: Black and yellow

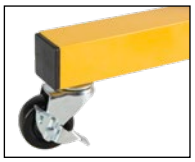

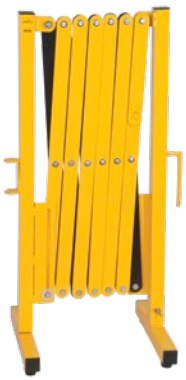

ZENITH® Safety Products

Model No.	Description	Price /Each
SDK990	Expandable Barrier	**299.00**
SDK991	Optional Caster Set	**29.35**

CROWD CONTROL

MARINE POSTS

- Excellent weather resistance
- Designed for use in many outdoor settings
- Best product in the market to be used in harsh environmental conditions, while still maintaining an attractive aesthetic
- Superior gloss, colour retention and storage stability
- All stainless steel hardware
- Over 40 belt color choices or custom printing options available
- Works for retractable belts of either 7.5' or 13'
- Height: 38"
- Post diameter: 2.5"
- Base diameter: 14"

SDN949 SDN952 SDN954 SDN955

TENSATOR®

Model No.	Mfg. No.	Tube	Tape Colour	Tape Length	Price /Each
POSTS					
SDN949	MP-33-STD-N0-B9X-C-S	Black	Black	7.5'	**449.00**
SDN950	MP-33-STD-N0-L5X-C-S	Black	Blue	7.5'	**449.00**
SDN951	MP-33-MAX-N0-B9X-C-S	Black	Black	13'	**489.00**
SDN952	MP-21-MAX-N0-D3X-C-S	Red	Red/White	13'	**489.00**
SDN953	MP-32-MAX-N0-B9X-C-S	White	Black	13'	**489.00**
SDN954	MP-35-MAX-N0-D4X-C-S	Yellow	Black/Yellow	13'	**489.00**
RECEIVER POSTS					
SDN955	MARINE POST-33-RCV	Black	-	-	**369.00**
SDN956	MARINE POST-21-RCV	Red	-	-	**369.00**
SDN957	MARINE POST-32-RCV	White	-	-	**369.00**
SDN958	MARINE POST-35-RCV	Yellow	-	-	**369.00**

SINGLE LINE & DUAL LINE HEAVY DUTY POSTS

- Rugged post and base recommended for outdoor use
- Weather resistant
- Recycled rubber stackable base
- Over 40 belt color choices or custom printing options available
- Dual line post is ADA compliant
- Works with retractable belts of either 7.5' or 13'
- Height: 38"
- Post diameter: 2.5"
- Base diameter: 19"

TENSATOR®

SDN959 SDN971 SDN965 SDN975

Model No.	Mfg. No.	Tube	Tape Colour	Tape Length	Price /Each
SINGLE LINE POSTS					
SDN959	886-21-STD-N0-R5X-C	Red	Red	7.5'	**299.00**
SDN960	886-21-MAX-N0-D3X-C	Red	Red/White	13'	**339.00**
SDN961	886-33-MAX-N0-D4X-C	Black	Black/Yellow	13'	**339.00**
SDN962	886-21-MAX-N0-R5X-C	Red	Red	13'	**339.00**
SDN963	886-33-MAX-N0-B9X-C	Black	Black	13'	**339.00**
SDN964	886-33-MAX-N0-O5X-C	Black	Orange	13'	**339.00**
RECEIVER POSTS					
SDN971	886-21-RCV	Red	-	-	**259.00**
SDN972	886-33-RCV	Black	-	-	**259.00**
DUAL LINE POSTS					
SDN965	886T2-35-STD-N0-D4X-C	Yellow	Black/Yellow	7.5'	**359.00**
SDN966	886T2-32-STD-N0-F2X-C	White	Orange	7.5'	**359.00**
SDN967	886T2-33-STD-N0-B9X-C	Black	Black	7.5'	**359.00**
SDN968	886T2-33-STD-N0-D4X-C	Black	Black/Yellow	7.5'	**359.00**
SDN969	886T2-35-MAX-N0-D4X-C	Yellow	Black/Yellow	13'	**449.00**
SDN970	886T2-21-MAX-N0-R5X-C	Red	Red	13'	**449.00**
RECEIVER POSTS					
SDN973	886T2-35-RCV	Yellow	-	-	**289.00**
SDN974	886T2-21-RCV	Red	-	-	**289.00**
SDN975	886T2-32-RCV	White	-	-	**289.00**

ADVANCED PEDESTRIAN GUIDANCE

- Yellow cart includes 4 caddies that can extend up to 105'
- Mobile deployment provides quick set up of continuous barrier with ease
- Large diameter wheels make the units easy to move
- Locking wheels for added stability
- Strong frame with yellow and black diagonally striped belts create a highly visible barrier
- Cart and caddy system is compact and easy to move
- Robust steel frame delivers durability in harsh environments
- Chemical resistant, hard wearing rubber wheels and hand-grips

Model No. SDN976
Mfg. No APG 1
Price/Each $8739.00

TENSATOR®

DELUXE POST STORAGE CART

- Six tier storage cart
- Heavy duty design to withstand continuous use for many years while protecting stanchions with padded slots
- Can store and transport up to 18 Tensabarrier® stanchions
- Finish: Steel

Model No. SGC240
Mfg. No 3035
Price/Each $1439.00

TENSATOR®

CLASSIC PORTABLE POSTS

- Portable posts provide a flexible railing system for traffic direction and crowd control
- Posts can be set-up, moved or stored easily to meet your changing needs
- Available in three styles in different finishes
- Posts available with or without tapped holes for sign frames or brackets

TRADITIONAL

- Popular post for guiding traffic
- Sturdy design
- Forged universal loop, recommended maximum rope length of 6' 0"
- 2" O.D. tube

UNIVERSAL

- Clean, functional design and lightweight
- Forged universal loop, recommended maximum rope length of 6' 0"

SAFETY

- Ideal for warehouses, factories or other areas requiring high visibility
- Scuff resistant, ABS plastic base
- Forged universal loop, recommended maximum rope length of 7' 0"

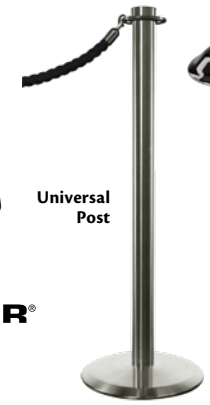

TENSATOR®

Without Tapped Holes Model No.	Mfg. No.	With Tapped Holes Model No.	Mfg. No.	Finish	Base Dia."	O.A. Height"	Wt. lbs.	Price /Each
TRADITIONAL								
SF990	310T-1P-NOT	**SI835**	310T-1P-TAP	Polished Chrome	11 1/2	39	35	**309.00**
SF991	310T-1S-NOT	**SI836**	310T-1S-TAP	Satin Chrome on Steel	11 1/2	39	35	**309.00**
SF992	310T-2P-NOT	**SI837**	310T-2P-TAP	Polished Brass	11 1/2	39	35	**349.00**
UNIVERSAL								
SF993	314U-1P-NOT	**SI838**	314U-1P-TAP	Polished Chrome	11 1/2	34	25	**239.00**
SF994	314U-1S-NOT	**SI839**	314U-1S-TAP	Satin Chrome on Steel	11 1/2	34	25	**239.00**
SF995	314U-2P-NOT	**SI840**	314U-2P-TAP	Polished Brass	11 1/2	34	25	**289.00**
SAFETY								
SF996	303	**SI841**	303-TAP	Yellow w/Black Top & Base	13 1/2	36	25	**189.00**

ROPES

- Three different rope styles available to use with classic portable posts; velour, naugahyde or twisted rope
- Velour and naugahyde have cotton core, recommend indoor use
- Twisted rope is plastic, indoor and outdoor usage
- Rope Dia.: 1.5"
- Long-lasting
- Sold per foot

Model No.	Mfg. No.	Colour	Price /Foot
VELOUR			
SG023	ROPE-VELR-22-01/0	Red	**15.90**
SEI725	ROPE -VELR-33-01/0	Black	**15.90**
SG024	ROPE-VELR-24-01/0	Royal Blue	**15.90**
NAUGAHYDE			
SEI727	ROPE-NAUG-21-01/0	Red	**17.70**
SEI728	ROPE-NAUG-33-01/0	Black	**17.70**
SEI729	ROPE-NAUG-43-01/0	Maroon	**17.70**
TWISTED PLASTIC			
SAQ109	ROPE-TWST-35-01/0	Yellow	**10.20**

ROPE ENDS

- Available in two styles, open hook and snap type
- Fits 1-1/2" diameter ropes
- Open hook and snap type ends are permanently attached to rope at factory
- **Order two rope ends for each length of rope**

Model No.	Mfg. No.	Finish	Price /Each
OPEN HOOKS			
SG010	ROPEEND-HOOK-1P	Polished Chrome	**33.70**
SG012	ROPEEND-HOOK-2P	Polished Brass	**43.00**
SEI731	ROPEEND-HOOK-33	Black	**33.70**
SNAPS			
SG013	ROPEEND-SNAP-1P	Polished Chrome	**36.60**
SG015	ROPEEND-SNAP-2P	Polished Brass	**46.20**
SEI732	ROPEEND-SNAP-33	Black	**37.30**

SIGN HOLDERS

TENSATOR®

FOR CLASSIC PORTABLE POSTS SELECT EITHER A SIGN BRACKET OR A FRAME

Sign Bracket

- Use with classic portable post models
- Fits 1/4" inserts or signs
- Available in chrome or black finish

Frames

- Full-framed message holder to fit on top of existing classic portable posts
- Horizontal or vertical orientation
- Available in 7" x 11" or 11" x 14" sizes
- Accommodates 1/8" inserts or signs
- Available in chrome or black finish

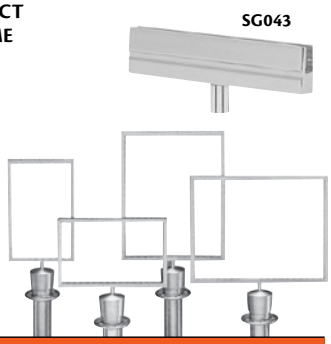

Model No.	Mfg. No.	Model No.	Mfg. No.	Description	Price /Each
CHROME FINISH		**BLACK FINISH**			
SG043	NOSC-1P	**SG044**	NOSC-33	Sign Bracket	**37.30**
SG027	NOSC-1P-0711LD-V	**SG039**	NOSC-33-0711LD-V	Sign Frame 7"W x 11"H	**56.00**
SG028	NOSC-1P-0711LD-H	**SG040**	NOSC-33-0711LD-H	Sign Frame 11"W x 7"H	**56.00**
SG029	NOSC-1P-1114LD-V	**SG041**	NOSC-33-1114LD-V	Sign Frame 11"W x 14"H	**84.00**
SG030	NOSC-1P-1114LD-H	**SG042**	NOSC-33-1114LD-H	Sign Frame 14"W x 11"H	**84.00**

FOR TENSABARRIER® POSTS SELECT EITHER A SIGN BRACKET WITH ADAPTER OR A FRAME WITH ADAPTER

Sign Bracket & Adapter

- Use with Tensabarrier® posts
- Fits 1/4" inserts or signs
- Available in chrome or black finish

Frames

- Full framed message holder to fit on top of existing Tensabarrier® posts
- Horizontal or vertical orientation
- Available in 7" x 11" or 11" x 14" sizes
- Accommodates 1/8" inserts or signs
- Available in chrome or black finish

Model No.	Mfg. No.	Model No.	Mfg. No.	Description	Price/Each
CHROME FINISH		**BLACK FINISH**			
SEI766	BRACKET-HDSC-1P	**SEI771**	BRACKET-HDSC-33	Sign Bracket with Adapter	**93.30**
SEI767	HDSC-1P-0711LD-V	**SEI772**	HDSC-33-0711LD-V	Sign Frame & Adapter 7"W x 11"H	**119.00**
SEI768	HDSC-1P-0711LD-H	**SEI773**	HDSC-33-0711LD-H	Sign Frame & Adapter 11"W x 7"H	**119.00**
SEI769	HDSC-1P-1114LD-V	**SEI774**	HDSC-33-1114LD-V	Sign Frame & Adapter 11"W x 14"H	**149.00**
SEI770	HDSC-1P-1114LD-H	**SEI775**	HDSC-33-1114LD-H	Sign Frame & Adapter 14"W x 11"H	**149.00**

ADAPTERS

For sign frame
Model No. SAQ831 Mfg. No. HDSC-33LD **Price/Each $56.00**

CROWD CONTROL

PLUS BARRIER POST SETS

- Stanchion has twist-off removable spike for dual purpose use – in soft ground surfaces with spike or in base by removing spike
- Suitable for indoor/outdoor use
- Heavy-duty woven polyester fabric that won't fray or pucker
- Base can be filled up to 18 lbs. with water or 30 lbs. with sand
- Overall Height: 42"
- Material: Plastic
- Telescoping Stake Extension: 22"-42"
- Tape length: 15'
- Includes:
  (2) PLUS Stanchions,
  (2) PLUS Bases,
  (1) PLUS Retractable Belt,
  (1) PLUS Receiver Head

SGQ820

SGI904

BANNER STAKES
BANNERSTAKES.COM

Model No.	Mfg. No.	Colour	Legend	Price /Each
SGI898	PL4285	Yellow	Caution-Do Not Enter	**513.00**
SGI904	PL4291	Yellow	Yellow/Black Diagonal	**530.00**
SGQ816	PL4246	Yellow	*Attention Entrée Interdite*	**543.00**
SGI906	PL4293	Red	Restricted Area	**513.00**
SGI907	PL4294	Red	Danger - Keep Out	**513.00**
SGQ818	PL4247	Red	*Danger Entrée Interdite*	**543.00**
SGQ820	PL4264	Red	Danger	**562.00**

PLUS BARRIER POST CART KITS WITH TRAY

- Mobile cart allows for quick and easy deployment of barricade system while minimizing storage space
- Industrial wheels for easy maneuverability on all types of surfaces
- Suitable for indoor/outdoor use
- The cart tray efficiently transports a wide variety of work-related materials (i.e.: small tools, janitorial products, etc)
- Foot lock brake prevents motion when cart is left unattended
- Rust-proof
- Material: Metal
- Height: 42"
- Extended Length 75'
- Telescoping Stake Extension: 22"-42"
- Tape length: 15'
- Includes:
  (1) Cart,
  (5) PLUS Stanchions,
  (5) PLUS Retractable Belts,
  (5) PLUS Bases,
  (1) Cart Accessory Tray

SGI802

BANNER STAKES
BANNERSTAKES.COM

Model No.	Mfg. No.	Colour	Legend	Price /Each
SGI793	PL4078T	Yellow	Caution-Do Not Enter	**1802.00**
SGQ813	PL4144T	Yellow	*Attention Entrée Interdite*	**1933.00**
SGI799	PL4008T	Yellow	Yellow/Black Diagonal	**1877.00**
SGI802	PL4011T	Red	Danger - Keep Out	**1802.00**
SGQ814	PL4145T	Red	*Danger Entrée Interdite*	**1933.00**
SGQ815	PL4162T	Red	Danger	**2014.00**

TRAFFIC CONE & CHAIN KITS

- Converts cones into bright safety barriers
- Economical way to connect cones along a highway, construction site, or anywhere a visual barrier is needed
- Available in a variety of colours
- Includes 6 cones, 6 cone chain connectors, and 50' of 2" chain
- Cone weight: 7 lbs.

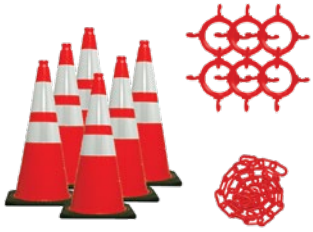

SGO165

SGO163

Mr. Chain

Model No.	Mfg. No.	Colour	Reflective Collars	Price /Each
28" CONE				
SGO159	93201-6	White	-	**269.00**
SGO160	93202-6	Yellow	-	**269.00**
SGO161	93206-6	Blue	-	**269.00**
SGO162	93213-6	Orange	-	**269.00**
SGO163	93214-6	Green	-	**269.00**
SGO164	93277-6	Green	4" & 6"	**339.00**
SGO165	93280-6	Orange	4" & 6"	**339.00**
36" CONE				
SGO166	97213-6	Orange	-	**419.00**
SGO167	97214-6	Green	-	**419.00**
SGO168	97277-6	Green	4" & 6"	**519.00**
SGO169	97280-6	Orange	4" & 6"	**519.00**

SAFETY CHAIN MAGNETIC RING & CARABINER SETS

- Includes: (2) Magnetic rings, (2) Carabiners
- Simply put the carabiner on the magnet ring, stick the magnetic end on any metallic surface, and then add a plastic chain (not included)
- Magnets supports up to 30 feet of plastic chain
- Finish: Black

Mr. Chain

Model No.	Mfg. No.	Price /Each
SGR097	72103	**24.40**

LOADING DOCK SAFETY CHAIN KITS

- Used to visually warn those in and around loading docks, stairwells, or any opening where a person could fall and be injured
- Designed to fit standard 9' door openings
- Finish: Yellow
- Includes:
  (2) Magnetic rings,
  (2) Carabiners,
  (1) 10' x 2" Plastic chain

Mr. Chain

Model No.	Mfg. No.	Price /Each
SGR096	72302	**46.70**

BARRIER CHAINS

- Perfect for forming lines, directing crowds, or restricting access to protect people and property
- Use with Mr. Chain stanchions, poles, and cone connectors (all sold separately) to create strong visual barriers in a wide variety of indoor and outdoor settings
- UV resistant for long-lasting outdoor use and will not rust
- Sold per foot

Mr. Chain

1.5" PLASTIC BARRIER CHAINS

Model No.	Mfg. No.	Colour	Price /Foot
SGT139	30001-C	White	1.99
SGT140	30002-C	Yellow	1.99
SGT141	30003-C	Black	1.99
SGT142	30005-C	Red	1.99
SGT143	30006-C	Blue	1.99
SGT144	30012-C	Orange	1.99
SGT145	30014-C	Green	1.99

2" PLASTIC BARRIER CHAINS

Model No.	Mfg. No.	Colour	Price /Foot
SEI670	50001-C	White	2.35
SG197	50002-C	Yellow	2.35
SEI669	50003-C	Black	2.35
SEI671	50005-C	Red	2.35
SGT146	50006-C	Blue	2.35
SGT147	50012-C	Orange	2.35
SGT148	50014-C	Green	2.35

STANCHIONS

- Creates a visual barrier for crowd control at indoor and outdoor events
- Hollow base can be filled with sand for extra stability
- Made of lightweight and durable polyethylene that will not rust
- Contains UV inhibitors to protect from fading

2" STANCHION

- Light duty
- Height 41"
- Base Dia. 14"
- Compatible with 1.5" and 2" barrier chain

2.5" STANCHION

- Medium duty
- Height 40"
- Base Dia. 14"
- Compatible with 2" barrier chain

3" STANCHION

- Heavy duty
- Height 41"
- Base Dia. 16"
- Compatible with 2" barrier chain

Mr. Chain

Model No.	Mfg. No.	Colour	Price /Each
2" DIA. STANCHIONS			
SGT149	91501	White	55.95
SGT150	91502	Yellow	55.95
SGT151	91503	Black	55.95
SGT152	91505	Red	55.95
SGT153	91506	Blue	55.95
SGT154	91512	Orange	55.95
SGT155	91514	Green	55.95
2.5" DIA. STANCHIONS			
SEI665	96401	White	59.95
SEI663	96402	Yellow	59.95
SEI664	96403	Black	59.95
SGT156	96405	Red	59.95
SGT157	96406	Blue	59.95
SGT158	96412	Orange	59.95
SGT159	96414	Green	59.95
3" DIA. STANCHIONS			
SGT160	99901	White	70.50
SEI666	99902	Yellow	70.50
SEI667	99903	Black	70.50
SEI668	99905	Red	70.50
SGT161	99906	Blue	70.50
SGT162	99912	Orange	70.50
SGT163	99914	Green	70.50

STANCHION & CHAIN KITS

- 2" stanchion kits includes: (6) 41" stanchions, (1) 50' of 2" plastic chain
- 2.5" stanchion kits includes: (6) 40" stanchions, (1) 50' of 2" plastic chain
- 3" stanchion kits includes: (4) 41" stanchions, (1) 30' of 2" plastic chain
- Two C-hooks on the top of each stanchion allow you easily attach the plastic chain and run it in a continuous length
- Great for sporting events, parking lots, malls, theaters, construction sites, schools, hotels, and more

Mr. Chain

Model No.	Mfg. No.	Colour	Price /Each
2" DIA. STANCHION KITS			
SGR054	71001-6	White	335.00
SGR055	71002-6	Yellow	335.00
SGR056	71003-6	Black	335.00
SGR057	71005-6	Red	335.00
SGR058	71006-6	Blue	335.00
SGR059	71012-6	Orange	335.00
SGR060	71014-6	Green	335.00
2.5" DIA. STANCHION KITS			
SGR061	71101-06	White	399.00
SGR062	71102-06	Yellow	399.00
SGR063	71103-06	Black	399.00
SGR064	71105-06	Red	399.00
SGR065	71106-06	Blue	399.00
SGR066	71112-06	Orange	399.00
SGR067	71114-06	Green	399.00
3" DIA. STANCHION KITS			
SGR068	71301-4	White	299.00
SGR069	71302-4	Yellow	299.00
SGR070	71303-4	Black	299.00
SGR071	71305-4	Red	299.00
SGR072	71306-4	Blue	299.00
SGR073	71312-4	Orange	299.00
SGR074	71314-4	Green	299.00

SAFETY MIRRORS

DOME MIRRORS

- Increase surveillance and prevent accidents due to blind corners
- Constructed of acrylic for added durability
- All mirrors have a black protective edge and hanging chips
- Full dome mirrors come with 4 hanging chains and hooks

Ideal Locations:

360°	4-way intersections
180°	T-intersections
90°	Corner intersections

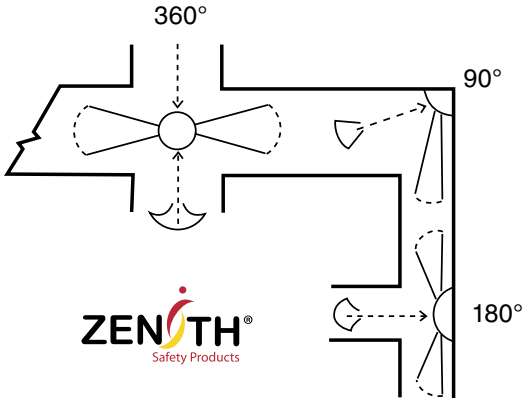

USE FURNITURE POLISH TO CLEAN MIRRORS. GLASS CLEANER WILL DAMAGE SURFACE.

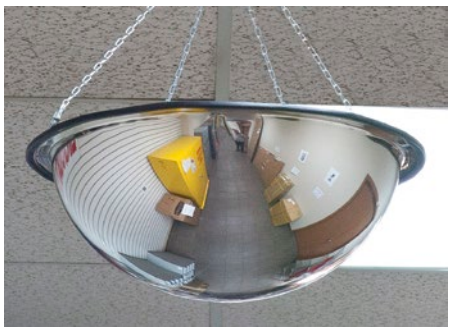

FULL DOME – 360°

Model No.	Mirror Dia."	Price /Each
OPEN-TOP		
SEJ875	20	**93.65**
SEJ876	24	**110.00**
SEJ877	31	**209.00**
SEJ878	47	**399.00**
CLOSED-TOP - GALVANIZED STEEL BACKING		
SDP520	18	**153.00**
SDP521	26	**242.00**
SDP522	32	**325.00**
SDP523	48	**578.00**

Note: Comes with hanging hardware

HALF DOME – 180°

Model No.	Mirror Dia." *	Price /Each
OPEN-TOP		
SEJ879	20	**59.80**
SEJ880	24	**70.75**
SEJ881	31	**130.00**
SEJ882	47	**252.00**
CLOSED-TOP		
SDP524	18	**127.00**
SDP525	26	**175.00**
SDP526	32	**248.00**
SDP527	48	**494.00**

* The dimensions listed are that of a full dome

QUARTER DOME – 90°

Model No.	Mirror Dia."*	Price /Each
OPEN-TOP		
SEJ883	20	**36.95**
SEJ884	24	**47.65**

* The dimensions listed are that of a full dome

DROP-IN CEILING PANEL DOMES

- One-piece drop-in dome replaces a standard 2' x 2' drop-ceiling tile
- Dome provides 360° viewing for optimal surveillance
- Ideal for 4-way intersections
- Diameter: 24"

Model No.	Price /Each
SDP536	**145.00**

USE FURNITURE POLISH TO CLEAN MIRRORS. GLASS CLEANER WILL DAMAGE SURFACE.

FLAT MIRRORS

- Offers optimal view with accurate depth perception
- Durable acrylic mirror
- Framed mirrors come with with galvanized steel back

	UNFRAMED		FRAMED	
Dim. L" x W"	Model No.	Price /Each	Model No.	Price /Each
12 x 12	**SDP510**	**70.95**	**SDP515**	**124.00**
12 x 18	**SDP511**	**80.65**	**SDP516**	**141.00**
18 x 24	**SDP512**	**134.00**	**SDP517**	**209.00**
18 x 30	**SGT377**	**149.00**	**SGT378**	**175.00**
24 x 30	**SDP513**	**202.00**	**SDP518**	**301.00**
30 x 36	**SDP514**	**296.00**	**SDP519**	**406.00**

SDP515

USE FURNITURE POLISH TO CLEAN MIRRORS. GLASS CLEANER WILL DAMAGE SURFACE.

CONVEX MIRRORS WITH BRACKET

- Indoor/Outdoor
- Removes blind spots which reduces the chance of accidents caused by blind corners
- Includes installation bracket
- Durable acrylic convex mirror provides 100° viewing angle
- Plastic back and frame

	BLACK		BEIGE	
Mirror Dia."	Model No.	Price /Each	Model No.	Price /Each
12	SDP505	54.95	SDP500	60.45
18	SDP506	74.55	SDP501	81.95
26	SDP507*	115.00	SDP502*	126.00
30	SDP508*	152.00	SDP503*	165.00
36	SDP509*	185.00	SDP504*	229.00

*Includes Extendable Arm

SDP500

USE FURNITURE POLISH TO CLEAN MIRRORS. GLASS CLEANER WILL DAMAGE SURFACE.

CONVEX MIRRORS WITH TELESCOPIC ARM

- Indoor/Outdoor
- Removes blind spots which reduces the chance of accidents caused by blind corners
- Comes with telescopic arm
- Durable acrylic convex mirror provides 100° viewing angle
- Plastic back and frame

	BLACK		BEIGE	
Mirror Dia."	Model No.	Price /Each	Model No.	Price /Each
12	SGI547	54.95	SGI552	60.45
18	SGI548	74.55	SGI553	81.95
26	SGI549	116.00	SGI554	127.00
30	SGI550	153.00	SGI555	165.00
36	SGI551	186.00	SGI556	230.00

SGI547

ROUNDTANGULAR CONVEX MIRRORS WITH BRACKET

- Indoor/Outdoor
- Designed to fit into smaller spaces
- Grants the same view as a full sized convex mirror but occupies a smaller area
- Ideal for blind spots near machinery and areas where mounting space is limited
- Includes installation bracket
- Durable acrylic mirror
- Rubber frame

	PLASTIC BACK		GALVANIZED STEEL BACK	
Mirror Dia."	Model No.	Price /Each	Model No.	Price /Each
12 x 18	SGI557	74.55	SGI561	139.00
18 x 26	SGI558*	120.00	SGI562*	227.00
20 x 30	SGI559*	160.00	SGI563*	275.00
24 x 36	SGI560*	201.00	SGI564*	373.00

*Includes Extendable Arm

SGI561

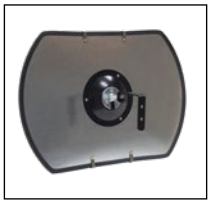

USE FURNITURE POLISH TO CLEAN MIRRORS. GLASS CLEANER WILL DAMAGE SURFACE.

ROUNDTANGULAR CONVEX MIRRORS WITH TELESCOPIC ARM

- Indoor/Outdoor
- Designed to fit into smaller spaces
- Grants the same view as a full sized convex mirror but occupies a smaller area
- Ideal for blind spots near machinery and areas where mounting space is limited
- Comes with telescopic arm
- Durable acrylic mirror
- Rubber frame

	PLASTIC BACK		GALVANIZED STEEL BACK	
Mirror Dia."	Model No.	Price /Each	Model No.	Price /Each
12 x 18	SDP528	74.55	SDP532	139.00
18 x 26	SDP529	120.00	SDP533	227.00
20 x 30	SDP530	160.00	SDP534	275.00
24 x 36	SDP531	201.00	SDP535	373.00

SGP528

SAFETY MIRRORS

INSPECTION MIRROR

- Ideal for viewing hard to see areas such as around corners or under vehicles and equipment
- 1" Swivel wheel allows for effortless maneuverability
- Lightweight design
- Handle Length: 47"
- Mirror Shape: Round
- Mirror Size: 8.5" dia.

Model No. SFQ773
Price/Each $79.75

ZENITH® Safety Products

RECTANGULAR INSPECTION MIRRORS

- Facilitates inspection of inaccessible work pieces and machines
- 2" x 3 3/4" rectangular steel mirror
- Telescoping handle: 10 3/4" extends to 26"

Model No. SED114
Mfg. No. 2100ME2X3
Price/Each $28.50

GENERAL®

INSPECTION MIRRORS & MAGNETIC RETRIEVER TOOLS

- 2" x 2" rectangular glass mirror
- 5/16" diameter magnet with 2-lb. lift
- Chrome-plated brass telescoping handle 6 1/4", extends to 28"

Model No. TLV723
Mfg. No. 301G240
Price/Each $21.30

MAG-MATE™

2 1/4" ROUND GLASS INSPECTION MIRRORS

- Telescoping handle: 7" extends to 36"
- Handle has non-slip, black cushion grip

Model No. SED113
Mfg. No. 2100ML2
Price/Each $30.40

MAG-MATE™

1 1/2" ROUND GLASS INSPECTION MIRRORS

- 4 1/2" telescoping handle extends to 24"
- Shaft made of chrome-plated brass
- Handle has a pocket clip with a non-slip black cushion grip

Model No. TLV720
Mfg. No. 306TR
Price/Each $24.40

MAG-MATE™

GLASS INSPECTION MIRRORS

- Non-slip solvent resistant telescoping handle
- Shaft made of stainless steel

TYO499

MAG-MATE™

Model No.	Mfg. No.	Mirror Length"	Mirror Width"	Handle Length"	Price /Each
TY0499	318	3 1/2	2 1/2	7 1/4 to 32 3/4	**33.00**
TY0500	312A	2	2	7 to 29	**22.50**

RECTANGULAR GLASS INSPECTION MIRRORS

- Non-slip, solvent-resistant telescoping handle 6 1/2", extends to 36 1/2"
- Shaft made of stainless steel
- 2" x 1 1/4"

Model No. TLV721
Mfg. No. 315
Price/Each $18.00

MAG-MATE™